Bourdon tube pressure gauge HZ for heating/plumbing

Benefits

- With self-sealing connection thread (NG 50 and 63) for fast mounting
- Red maximum mark on dial
- Adjustable red reference pointer and green operation segment on window
- Corrosion-resistant housing

Application

For gaseous and liquid media which are not highly viscous, do not crystallise and do not attack copper alloys and EPDM.
! For measuring gas or vapour, observe the table "Selection Criteria as per EN 837-2" (see appendix)!

Technical specifications

Nominal size
50 – 63 – 80

Accuracy class (EN 837-1/6)
2,5

Ranges
0/4 bar

Application area

Static load:	¾ x full scale value
Dynamic load:	⅔ x full scale value
Short-term:	Full scale value

Operating temperature range

Medium:	Max. 60 °C
Ambient:	-20/+60 °C

Temperature performance
Indication error when the temperature of the measuring system deviates from the normal temperature of 20 °C:
at rising temperature approx. ± 0.4 %/10 K
falling temperature approx. ± 0.4 %/10 K
of full scale value

Degree of protection
IP 32 (EN 60529)

Standard version

Connection
Brass, bottom back,
bottom or centre back

NG 50:	G¼B, Self-sealing with PTFE sealing ring
NG 63:	G¼B, Self-sealing with PTFE sealing ring
NG 63:	G⅜B, Self-sealing with PTFE sealing ring
NG 80:	G½B
NG 80:	G¼B, Self-sealing with PTFE sealing ring

Measuring element
Bourdon tube, "C" type tube
Copper alloy

Movement
Brass

Dial
Plastic, white
With red mark at 3 bar and green sector from 1.5 to 3 bar, With red mark at 2.5 bar and green sector from 1.5 to 2.5 bar
Scaling black

Pointer
Plastic, black

Housing
Plastic (ABS), black, highly impact-resistant and corrosion-resistant

Window
Plastic, clipped in
With adjustable red reference pointer and green flag

Technical drawings

HZ 50 – bottom back connection

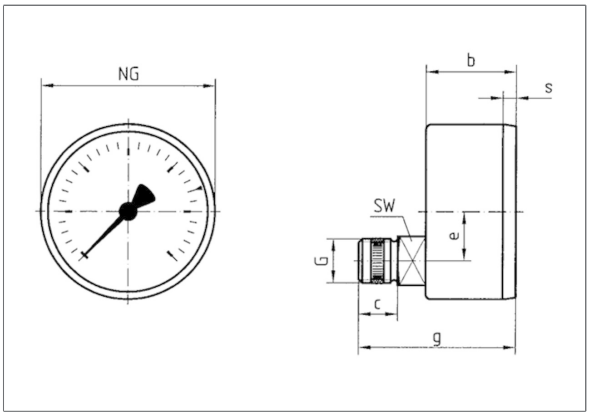

Dimensions (mm)

NG	b	c	e	g	G	s	SW
50	25,8	11,2	14	43	G¼B	3,8	14

RF/HZ 63 – bottom connection

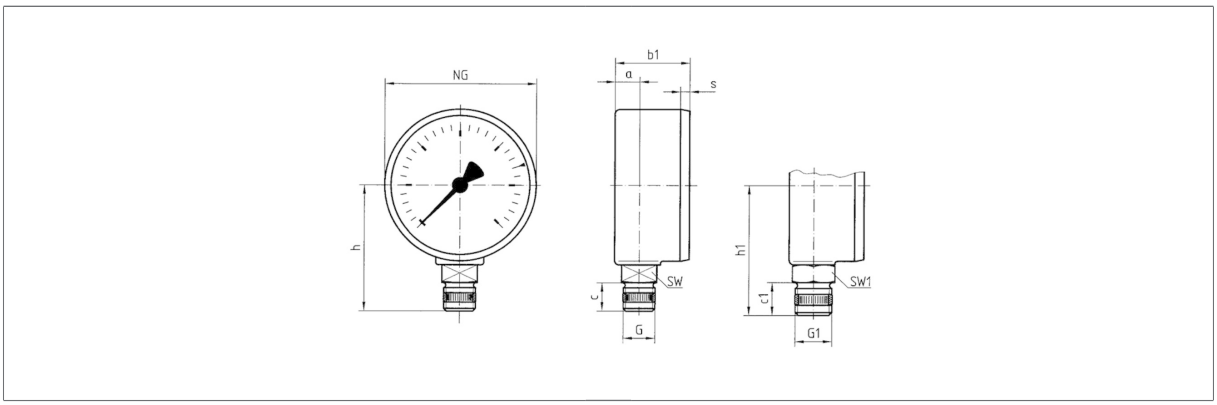

Dimensions (mm)

NG	a	b1	c	c1	G	G1	h	h1	s	SW	SW1
63	9,8	29,7	11,2	13	G½B	G⅝B	49,5	51,5	3,7	14	17

RF/HZ 63 – centre back connection

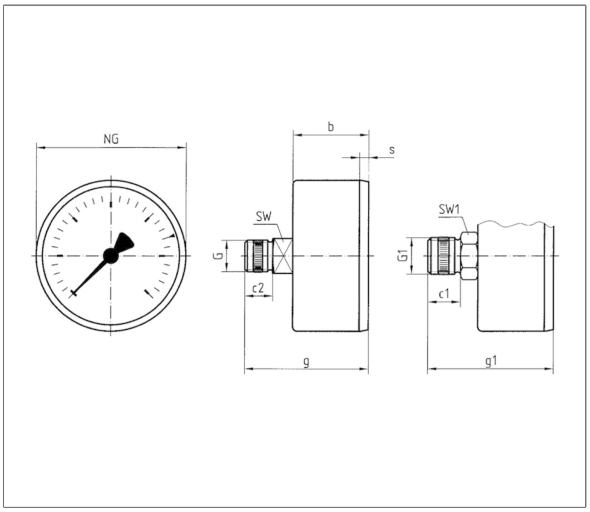

Dimensions (mm)

NG	b	c1	c2	g1	g2	G	G1	s	SW	SW1
63	30,4	13	11,5	49,9	50,4	G¼B	G⅜B	3,7	14	17

RF 80/HY 80/HZ 80 – bottom connection

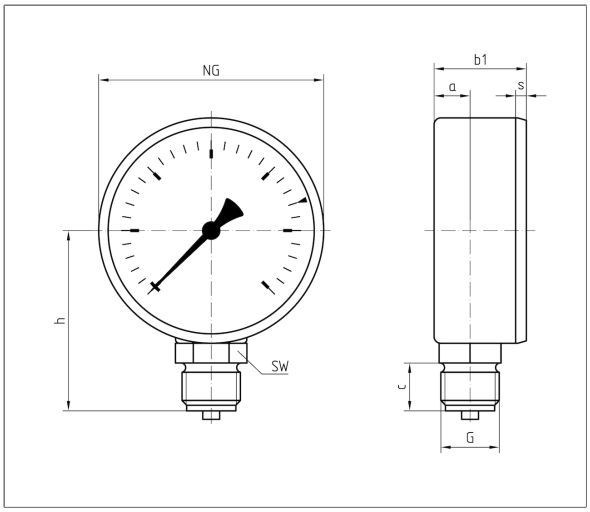

Dimensions (mm)

NG	a	b1	c	G	h	s	SW
80	12,8	32,8	17	G½B	64	2,8	14

HZ 80 – centre back connection

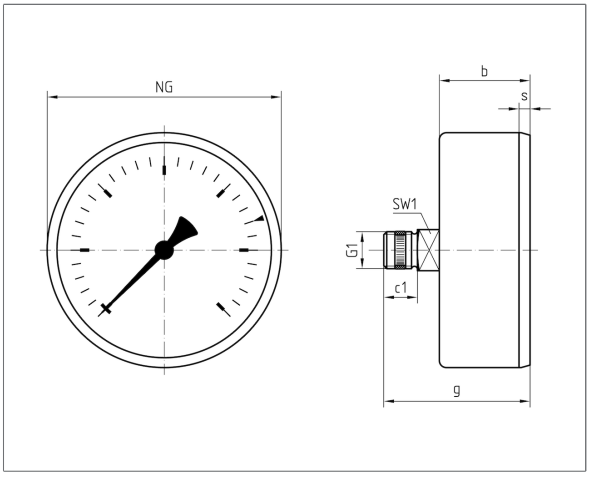

Dimensions (mm)

NG	b	c1	g	G1	s	SW1
80	31	15	50	G¼B	2,8	14

Versions

HZ 50

	Housing ⌀	Connection	Thread	Alignment	Range	Type	Part no.
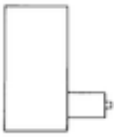	50 mm	G¼B	Self-sealing with PTFE sealing ring	Bottom back	0/4 bar	HZ 50 ax	63927

Blue part no. = in-stock items

HZ 63

	Housing ⌀	Connection	Thread	Alignment	Range	Type	Part no.
	63 mm	G¼B	Self-sealing with PTFE sealing ring	Bottom	0/4 bar	HZ 63 rad	63911
	63 mm	G⅜B	Self-sealing with PTFE sealing ring	Bottom	0/4 bar	HZ 63 rad	63908
	63 mm	G⅜B	Self-sealing with PTFE sealing ring	Bottom	0/4 bar	HZ 63 rad	63910
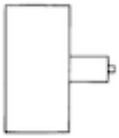	63 mm	G¼B	Self-sealing with PTFE sealing ring	Centre back	0/4 bar	HZ 63 ax	63915
	63 mm	G⅜B	Self-sealing with PTFE sealing ring	Centre back	0/4 bar	HZ 63 ax	63909
	63 mm	G⅜B	Self-sealing with PTFE sealing ring	Centre back	0/4 bar	HZ 63 ax	63914

Blue part no. = in-stock items

HZ 80

	Housing ⌀	Connection	Thread	Alignment	Range	Type	Part no.
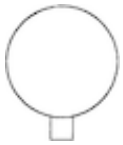	80 mm	G½B	–	Bottom	0/4 bar	HZ 80 rad	63918
	80 mm	G¼B with valve G¼ x G½	Self-sealing with PTFE sealing ring	Bottom	0/4 bar	HZ 80 rad	63913
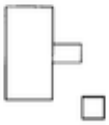	80 mm	G¼B with valve G¼ x G½	Self-sealing with PTFE sealing ring	Centre back	0/4 bar	HZ 80 ax	63919

Blue part no. = in-stock items