Domestic water system centre HWSC

Benefits

- Extremely compact system centre 395 x 760 mm (W x H)
- Lightning-fast, easy installation
- Innovative backwashing system - fast and thorough cleaning of the filter element, low water consumption
- Modular design: Can be extended by additional pressure-reduced outlets, automatic backwashing unit, refill combinations, etc.

Application

For drinking water installations as per EN 806, DIN 1988 and DIN 4753-1. The system centre combines all functions of conventional water distribution installations in a small-footprint unit: the pressure reducer reduces the inlet pressure to an even, system-specific pressure in order to protect the installation and to ensure economical water consumption. The water filter keeps pollutants such as rust particles or sand grains from reaching the domestic water installation, thus protecting valves, machines, boilers, etc. from malfunctions caused by dirt. With its straightforward design and unobtrusive colour, the domestic water system centre fits in perfectly with modern equipment rooms, basements and utility rooms.

Versions

	Part no.
Domestic water system centre HWSC	42755
Connection kit refilling of heating system	42757
Connection kit water softening	42756
Extension segment supply outlet G¾ female thread	42758
Automatic backwashing unit RA 01	42739

Blue part no. = in-stock items

Description

Compact, tightness-tested domestic water system centre as a complete solution for the distribution of drinking water in buildings. The base version of HWSC consists of a backflow preventer, filter combination with fine filter and pressure reducer, drain unit with connection possibility to the wastewater system, three supply outlets, safety valve and all function components. The individual components are DVGW-certified or comply with the DVGW regulations. The assembly is contained in a form-fit insulation for easy access and operation. The integrated transparent front door allows for checking the system pressure and the safety valves and provides easy access to start backwashing; it is not necessary to remove the upper part of the insulation. The memory pointer on the door lets you set the date for the next backwashing procedure.

HWSC excels with a dramatic reduction of the installation time: a drilling template is shipped with the unit for precise positioning of the three holes. Hanger bolts allow for precise adjustment of the domestic water system centre to the wall and enable easy horizontal and vertical alignment. HWSC features a variable height adjustment from 65 to 115 mm to allow for precise adaptation to the individual distance of the water meter from the wall. The default connection setting is intended for left-side connection, but HWSC can be converted to right-side connection in a matter of minutes.
The integrated filter combination features an innovative backwashing system with rotating impeller which ensures fast and thorough cleaning of the fine filter and low water consumption. The entire sieve surface of the filter insert is cleaned at high pressure. The pressure reducer reduces the inlet pressure to an even, system-specific pressure; part of the water flows directly and without pressure reduction to the high-pressure outlet for the garden line. If this is not required, it can be converted into an additional pressure-reduced supply outlet. The insulation can accommodate up to four supply outlets; any additional outlets must be mounted outside the insulation. Due to the modular design and the defined connections, it is easy to fit extensions with an automatic backwashing unit, a refill combination for filling heating systems or a water softening system.

Technical specifications

Medium
Drinking water

Inlet pressure
Max. 16 bar

Flow coefficient Kvs
4.2 m³/h

Operating temperature range
Medium: 5/30 °C

Mounting position
Vertical
Supply outlets to the top

Dimensions (housing)
W x H x D: 395 x 665 x 210 m

Weight
Approx. 12 kg

Connection drinking water
Input: R1
Supply system: G¾ female

Connection waste water
DN50, DN75

Material
Fittings: Brass (CW617N)
Insulation: Polypropylene EPP
Filter housing: Brass (dezincification-resistant)
Fine filter: Stainless steel
Seals: EPDM

DVGW approval
All components are DVGW-conform.
Components with DVGW approval: filter combination, backflow preventer, seals

SVGW approval
Components with SVGW approval: Filter combination
Certificate no. 1310-6204

Technical drawings

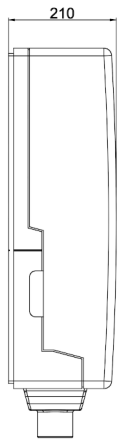

Dimensions (in mm)

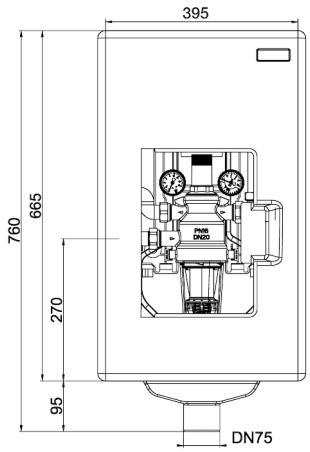

Dimensions (in mm)

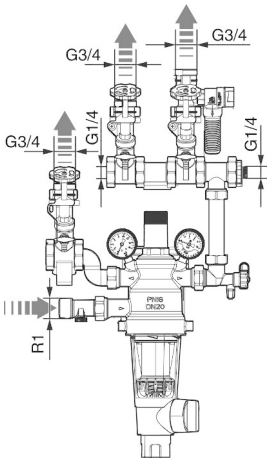
G3/4
G3/4
G3/4
G1/4
G1/4
R1
PN16
DN20

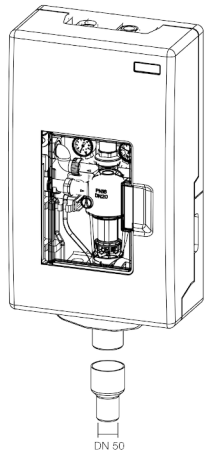
DN 50