Diaphragm seal MD 30 standard version with threaded connection

Benefits

- Can be disassembled and cleaned
- Applications up to 250 bar
- Welded diaphragm
- Many process connections available

Application

For mounting to Bourdon tube pressure gauges, pressure transducers or pressure switches. For corrosive, viscous, polluted or hot media.

Versions

	Process connection	Instrument connection	Nominal pressure	Minimum range* (in bar) at nominal size				Part no.
				63	100	160	DMU	
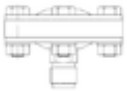	G½B	Welded connection	PN 25	0.6 bar	0.6 bar	0.6 bar	0.6 bar	31417W
	G½B	Welded connection	PN 100	0.6 bar	0.6 bar	0.6 bar	0.6 bar	31331W
	G½B	Welded connection	PN 250	0.6 bar	0.6 bar	0.6 bar	0.6 bar	31332W

Blue part no. = in-stock items

Technical specifications

Process connection/lower body
Stainless steel 316 L
G½B

Diaphragm
Stainless steel 316 L

Seal
FKM (Viton)

Instrument connection
Stainless steel 316 L
Welded connection

Retaining flanges
Stainless steel 316 L

Spacer ring
PN 100: Stainless steel 316 L

Screws and nuts
Stainless steel 304

Pressure transmission liquid
Paraffin oil (FM 09), FDA-listed

Pressure range
See ordering table

Nominal pressure
PN 25, PN 100, PN 250

Options

Process connection/lower body
- Special materials/coatings
- Other connection threads

Diaphragm
- Special materials/coatings

Seal
- Other materials

Instrument connection/upper body
- Adapter for instrument connection G¼B/G½B
- Cooling element (> 100 °C)
- Capillary tube

Screws/nuts/spacer ring
- Other materials

Other
- Other filling liquids

Technical drawings

Type MD 30

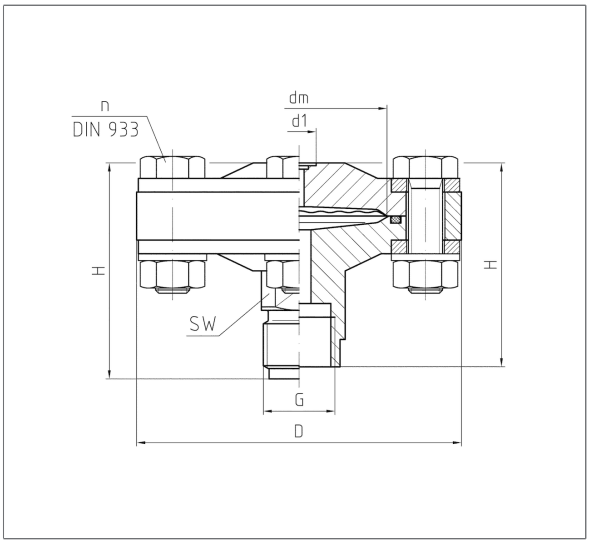

G	d1	PN	dm	D	H	n	SW
G½	10	25	36	95	60	4xM10	22
G½B	10	25	36	95	63	4xM10	22
½-14NPT	10	25	36	95	63	4xM10	22
G½	10	100	36	95	60	4xM10	22
G½B	10	100	36	95	63	4xM10	22
½-14NPT	10	100	36	95	63	4xM10	22
G½	10	250	56	95	56	8xM10	22
G½B	10	250	56	95	79	8xM10	22
½-14NPT	10	250	56	95	76	8xM10	22