Glycerine filled Bourdon tube pressure gauges Type D8

Benefits

- Compact design
- Can be used in case of heavy vibrations and high, dynamic pressure loads
- Longer service life due to less wear and corrosion protection of the measuring system
- No steaming up of the inside of the window in case of outdoor applications

Application

For gaseous and liquid media which are not highly viscous, do not crystallise and do not attack copper alloys. For measurements in areas with high vibration levels and high, dynamic pressure loads.

Technical specifications

Type
D8

Nominal size
100 – 160

Accuracy class (EN 837-1/6)
1,0

Ranges (EN 837-1/5)
See ordering table

Application area

Static load	
≤ 600 bar:	Full scale value
> 600 bar:	¾ x full scale value
Dynamic load	
≤ 600 bar:	0.9 x full scale value
> 600 bar:	⅔ x full scale value
Short-term	
≤ 600 bar:	1.3 x full scale value
> 600 bar:	Full scale value

Operating temperature range

Medium:	Max. 60 °C
Ambient:	-20/+60 °C

Degree of protection
IP 54 (EN 60529) with housing vent (≤ 25 bar)
IP 65 (EN 60529)

Standard version

Connection
Brass, bottom or bottom back

Measuring element
Bourdon tube

≤ 60 bar:	"C" type tube, Copper alloy
> 60 bar:	Helical tube, stainless steel 316 Ti/316 L

Movement
Brass

Dial
Aluminium, white
Scaling black

Pointer
Aluminium, black

Housing
Stainless steel 304, with blow-out

Bayonet type bezel
Stainless steel 304

Window
Instrument glass

Filling liquid
Glycerine (99.5 %)

Options

- Back flange
- 3-hole fixing, panel mounting bezel
- 3-hole fixing, panel mounting bezel (NG 63)
- Special scales
- Other process connections

Technical drawings

Centre back connection

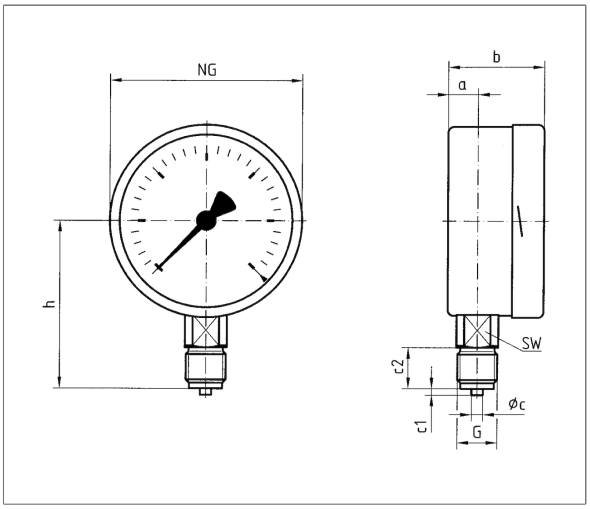

bottom back connection

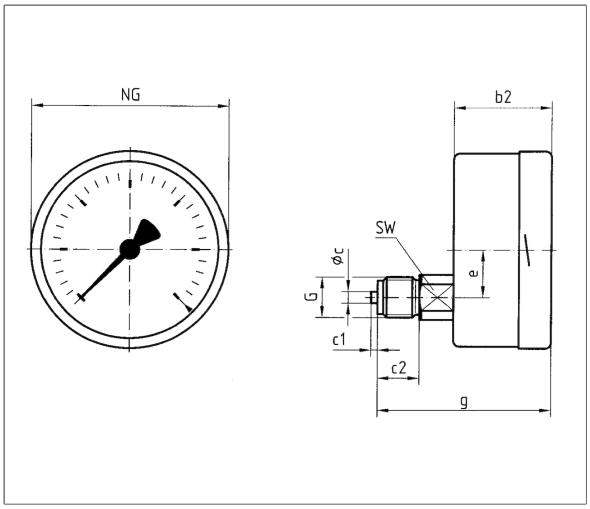

Dimensions (mm)

NG	a	b	Øc	c1	c2	G	h	SW
100	15,6	49	6	3	20	G½B	86	22
160	17,5	50	6	3	20	G½B	116	22

Dimensions (mm)

NG	b2	Øc	c1	c2	e	G	g	SW
100	49	6	3	20	26,5	G½B	81	22
160	50	6	3	20	26,5	G½B	82	22

bottom back connection, 3-hole fixing, panel mounting bezel

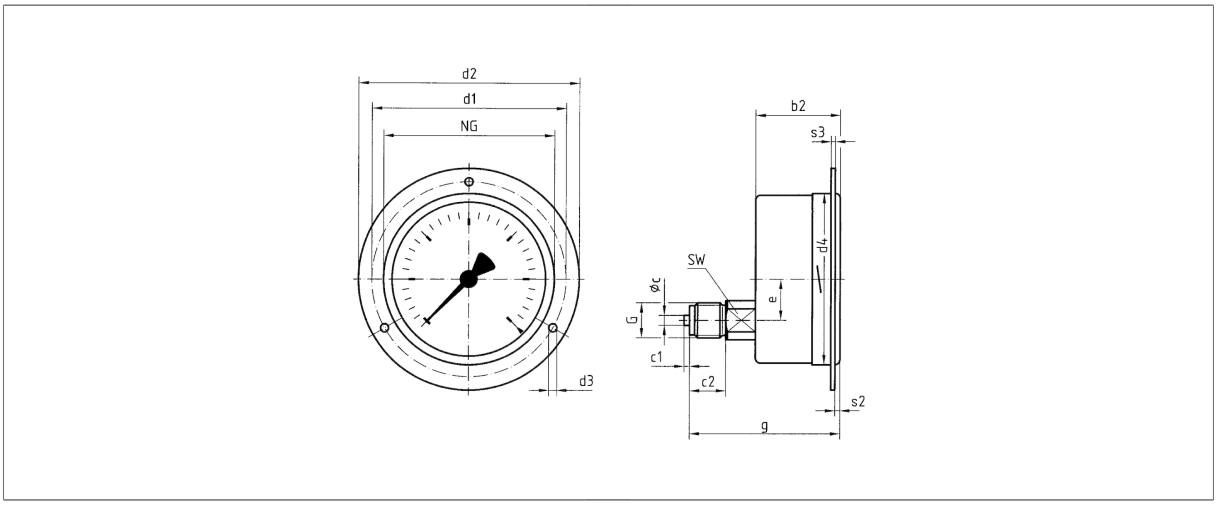

Dimensions (mm)

NG	b2	∅c	c1	c2	d1*	d2	d3*	d4	e	G	g	s2	s3	SW
100	49	6	3	20	116	132	4,8	104	26,5	G½B	81	4	2	22
160	50	6	3	20	178	196	5,8	164	26,5	G½B	82	4	2	22

Versions

RF100Gly D801

Housing ⌀	Connection	Alignment	Housing	Accuracy class	Range	Type	Part no.
100 mm	G½B	Bottom	Stainless steel 304	1,0	-1/0 bar	RF100Gly D801	85201801
100 mm	G½B	Bottom	Stainless steel 304	1,0	-1/+0.6 bar	RF100Gly D801	85202801
100 mm	G½B	Bottom	Stainless steel 304	1,0	-1/+1.5 bar	RF100Gly D801	85203801
100 mm	G½B	Bottom	Stainless steel 304	1,0	-1/+3 bar	RF100Gly D801	85204801
100 mm	G½B	Bottom	Stainless steel 304	1,0	-1/+5 bar	RF100Gly D801	85205801
100 mm	G½B	Bottom	Stainless steel 304	1,0	-1/+9 bar	RF100Gly D801	85206801
100 mm	G½B	Bottom	Stainless steel 304	1,0	-1/+15 bar	RF100Gly D801	85207801
100 mm	G½B	Bottom	Stainless steel 304	1,0	0/0.6 bar	RF100Gly D801	85209801
100 mm	G½B	Bottom	Stainless steel 304	1,0	0/1 bar	RF100Gly D801	85210801
100 mm	G½B	Bottom	Stainless steel 304	1,0	0/1.6 bar	RF100Gly D801	85211801
100 mm	G½B	Bottom	Stainless steel 304	1,0	0/2.5 bar	RF100Gly D801	85212801
100 mm	G½B	Bottom	Stainless steel 304	1,0	0/4 bar	RF100Gly D801	85213801
100 mm	G½B	Bottom	Stainless steel 304	1,0	0/6 bar	RF100Gly D801	85214801

Blue part no. = in-stock items

	Housing ⌀	Connection	Alignment	Housing	Accuracy class	Range	Type	Part no.
	100 mm	G½B	Bottom	Stainless steel 304	1,0	0/10 bar	RF100Gly D801	85215801
	100 mm	G½B	Bottom	Stainless steel 304	1,0	0/16 bar	RF100Gly D801	85216801
	100 mm	G½B	Bottom	Stainless steel 304	1,0	0/25 bar	RF100Gly D801	85217801
	100 mm	G½B	Bottom	Stainless steel 304	1,0	0/40 bar	RF100Gly D801	85218801
	100 mm	G½B	Bottom	Stainless steel 304	1,0	0/60 bar	RF100Gly D801	85219801
	100 mm	G½B	Bottom	Stainless steel 304	1,0	0/100 bar	RF100Gly D801	85220801
	100 mm	G½B	Bottom	Stainless steel 304	1,0	0/160 bar	RF100Gly D801	85221801
	100 mm	G½B	Bottom	Stainless steel 304	1,0	0/250 bar	RF100Gly D801	85222801
	100 mm	G½B	Bottom	Stainless steel 304	1,0	0/400 bar	RF100Gly D801	85223801
	100 mm	G½B	Bottom	Stainless steel 304	1,0	0/600 bar	RF100Gly D801	85224801
	100 mm	G½B	Bottom	Stainless steel 304	1,0	0/1,000 bar	RF100Gly D801	85225801

Blue part no. = in-stock items

RF160Gly D801

	Housing ⌀	Connection	Alignment	Housing	Accuracy class	Range	Type	Part no.
	160 mm	G½B	Bottom	Stainless steel 304	1,0	-1/0 bar	RF160Gly D801	85251801
	160 mm	G½B	Bottom	Stainless steel 304	1,0	-1/+0.6 bar	RF160Gly D801	85252801
	160 mm	G½B	Bottom	Stainless steel 304	1,0	-1/+1.5 bar	RF160Gly D801	85253801
	160 mm	G½B	Bottom	Stainless steel 304	1,0	-1/+3 bar	RF160Gly D801	85254801
	160 mm	G½B	Bottom	Stainless steel 304	1,0	-1/+5 bar	RF160Gly D801	85255801
	160 mm	G½B	Bottom	Stainless steel 304	1,0	-1/+9 bar	RF160Gly D801	85256801
	160 mm	G½B	Bottom	Stainless steel 304	1,0	-1/+15 bar	RF160Gly D801	85257801
	160 mm	G½B	Bottom	Stainless steel 304	1,0	0/0.6 bar	RF160Gly D801	85259801
	160 mm	G½B	Bottom	Stainless steel 304	1,0	0/1 bar	RF160Gly D801	85260801
	160 mm	G½B	Bottom	Stainless steel 304	1,0	0/1.6 bar	RF160Gly D801	85261801
	160 mm	G½B	Bottom	Stainless steel 304	1,0	0/2.5 bar	RF160Gly D801	85262801
	160 mm	G½B	Bottom	Stainless steel 304	1,0	0/4 bar	RF160Gly D801	85263801
	160 mm	G½B	Bottom	Stainless steel 304	1,0	0/6 bar	RF160Gly D801	85264801
	160 mm	G½B	Bottom	Stainless steel 304	1,0	0/10 bar	RF160Gly D801	85265801
	160 mm	G½B	Bottom	Stainless steel 304	1,0	0/16 bar	RF160Gly D801	85266801

Blue part no. = in-stock items

	Housing ⌀	Connection	Alignment	Housing	Accuracy class	Range	Type	Part no.
	160 mm	G½B	Bottom	Stainless steel 304	1,0	0/25 bar	RF160Gly D801	85267801
	160 mm	G½B	Bottom	Stainless steel 304	1,0	0/40 bar	RF160Gly D801	85268801
	160 mm	G½B	Bottom	Stainless steel 304	1,0	0/60 bar	RF160Gly D801	85269801
	160 mm	G½B	Bottom	Stainless steel 304	1,0	0/100 bar	RF160Gly D801	85270801
	160 mm	G½B	Bottom	Stainless steel 304	1,0	0/160 bar	RF160Gly D801	85271801
	160 mm	G½B	Bottom	Stainless steel 304	1,0	0/250 bar	RF160Gly D801	85272801
	160 mm	G½B	Bottom	Stainless steel 304	1,0	0/400 bar	RF160Gly D801	85273801
	160 mm	G½B	Bottom	Stainless steel 304	1,0	0/600 bar	RF160Gly D801	85274801
	160 mm	G½B	Bottom	Stainless steel 304	1,0	0/1,000 bar	RF160Gly D801	85275801

Blue part no. = in-stock items

RF100Gly D811

	Housing ⌀	Connection	Alignment	Housing	Accuracy class	Range	Type	Part no.
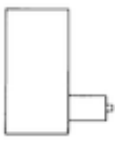	100 mm	G½B	Bottom back	Stainless steel 304	1,0	-1/0 bar	RF100Gly D811	85201811
	100 mm	G½B	Bottom back	Stainless steel 304	1,0	-1/+0.6 bar	RF100Gly D811	85202811
	100 mm	G½B	Bottom back	Stainless steel 304	1,0	-1/+1.5 bar	RF100Gly D811	85203811
	100 mm	G½B	Bottom back	Stainless steel 304	1,0	-1/+3 bar	RF100Gly D811	85204811
	100 mm	G½B	Bottom back	Stainless steel 304	1,0	-1/+5 bar	RF100Gly D811	85205811
	100 mm	G½B	Bottom back	Stainless steel 304	1,0	-1/+9 bar	RF100Gly D811	85206811
	100 mm	G½B	Bottom back	Stainless steel 304	1,0	-1/+15 bar	RF100Gly D811	85207811
	100 mm	G½B	Bottom back	Stainless steel 304	1,0	0/0.6 bar	RF100Gly D811	85209811
	100 mm	G½B	Bottom back	Stainless steel 304	1,0	0/1 bar	RF100Gly D811	85210811
	100 mm	G½B	Bottom back	Stainless steel 304	1,0	0/1.6 bar	RF100Gly D811	85211811
	100 mm	G½B	Bottom back	Stainless steel 304	1,0	0/2.5 bar	RF100Gly D811	85212811
	100 mm	G½B	Bottom back	Stainless steel 304	1,0	0/4 bar	RF100Gly D811	85213811
	100 mm	G½B	Bottom back	Stainless steel 304	1,0	0/6 bar	RF100Gly D811	85214811
	100 mm	G½B	Bottom back	Stainless steel 304	1,0	0/10 bar	RF100Gly D811	85215811
	100 mm	G½B	Bottom back	Stainless steel 304	1,0	0/16 bar	RF100Gly D811	85216811
	100 mm	G½B	Bottom back	Stainless steel 304	1,0	0/25 bar	RF100Gly D811	85217811
	100 mm	G½B	Bottom back	Stainless steel 304	1,0	0/40 bar	RF100Gly D811	85218811

Blue part no. = in-stock items

	Housing ⌀	Connection	Alignment	Housing	Accuracy class	Range	Type	Part no.
	100 mm	G½B	Bottom back	Stainless steel 304	1,0	0/60 bar	RF100Gly D811	85219811
	100 mm	G½B	Bottom back	Stainless steel 304	1,0	0/100 bar	RF100Gly D811	85220811
	100 mm	G½B	Bottom back	Stainless steel 304	1,0	0/160 bar	RF100Gly D811	85221811
	100 mm	G½B	Bottom back	Stainless steel 304	1,0	0/250 bar	RF100Gly D811	85222811
	100 mm	G½B	Bottom back	Stainless steel 304	1,0	0/400 bar	RF100Gly D811	85223811
	100 mm	G½B	Bottom back	Stainless steel 304	1,0	0/600 bar	RF100Gly D811	85224811
	100 mm	G½B	Bottom back	Stainless steel 304	1,0	0/1,000 bar	RF100Gly D811	85225811

Blue part no. = in-stock items

RF160Gly D811

	Housing ⌀	Connection	Alignment	Housing	Accuracy class	Range	Type	Part no.
	160 mm	G½B	Bottom back	Stainless steel 304	1,0	-1/0 bar	RF160Gly D811	85251811
	160 mm	G½B	Bottom back	Stainless steel 304	1,0	-1/+0.6 bar	RF160Gly D811	85252811
	160 mm	G½B	Bottom back	Stainless steel 304	1,0	-1/+1.5 bar	RF160Gly D811	85253811
	160 mm	G½B	Bottom back	Stainless steel 304	1,0	-1/+3 bar	RF160Gly D811	85254811
	160 mm	G½B	Bottom back	Stainless steel 304	1,0	-1/+5 bar	RF160Gly D811	85255811
	160 mm	G½B	Bottom back	Stainless steel 304	1,0	-1/+9 bar	RF160Gly D811	85256811
	160 mm	G½B	Bottom back	Stainless steel 304	1,0	-1/+15 bar	RF160Gly D811	85257811
	160 mm	G½B	Bottom back	Stainless steel 304	1,0	0/0.6 bar	RF160Gly D811	85259811
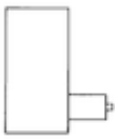	160 mm	G½B	Bottom back	Stainless steel 304	1,0	0/1 bar	RF160Gly D811	85260811
	160 mm	G½B	Bottom back	Stainless steel 304	1,0	0/1.6 bar	RF160Gly D811	85261811
	160 mm	G½B	Bottom back	Stainless steel 304	1,0	0/2.5 bar	RF160Gly D811	85262811
	160 mm	G½B	Bottom back	Stainless steel 304	1,0	0/4 bar	RF160Gly D811	85263811
	160 mm	G½B	Bottom back	Stainless steel 304	1,0	0/6 bar	RF160Gly D811	85264811
	160 mm	G½B	Bottom back	Stainless steel 304	1,0	0/10 bar	RF160Gly D811	85265811
	160 mm	G½B	Bottom back	Stainless steel 304	1,0	0/16 bar	RF160Gly D811	85266811
	160 mm	G½B	Bottom back	Stainless steel 304	1,0	0/25 bar	RF160Gly D811	85267811
	160 mm	G½B	Bottom back	Stainless steel 304	1,0	0/40 bar	RF160Gly D811	85268811
	160 mm	G½B	Bottom back	Stainless steel 304	1,0	0/60 bar	RF160Gly D811	85269811
	160 mm	G½B	Bottom back	Stainless steel 304	1,0	0/100 bar	RF160Gly D811	85270811

Blue part no. = in-stock items

	Housing ⌀	Connection	Alignment	Housing	Accuracy class	Range	Type	Part no.
	160 mm	G½B	Bottom back	Stainless steel 304	1,0	0/160 bar	RF160Gly D811	85271811
	160 mm	G½B	Bottom back	Stainless steel 304	1,0	0/250 bar	RF160Gly D811	85272811
	160 mm	G½B	Bottom back	Stainless steel 304	1,0	0/400 bar	RF160Gly D811	85273811
	160 mm	G½B	Bottom back	Stainless steel 304	1,0	0/600 bar	RF160Gly D811	85274811
	160 mm	G½B	Bottom back	Stainless steel 304	1,0	0/1,000 bar	RF160Gly D811	85275811

Blue part no. = in-stock items

RF100Gly D831

	Housing ⌀	Connection	Alignment	Housing	Accuracy class	Range	Type	Part no.
	100 mm	G½B	Bottom back	Stainless steel 304	1,0	-1/0 bar	RF100Gly D831	85201831
	100 mm	G½B	Bottom back	Stainless steel 304	1,0	-1/+0.6 bar	RF100Gly D831	85202831
	100 mm	G½B	Bottom back	Stainless steel 304	1,0	-1/+1.5 bar	RF100Gly D831	85203831
	100 mm	G½B	Bottom back	Stainless steel 304	1,0	-1/+3 bar	RF100Gly D831	85204831
	100 mm	G½B	Bottom back	Stainless steel 304	1,0	-1/+5 bar	RF100Gly D831	85205831
	100 mm	G½B	Bottom back	Stainless steel 304	1,0	-1/+9 bar	RF100Gly D831	85206831
	100 mm	G½B	Bottom back	Stainless steel 304	1,0	-1/+15 bar	RF100Gly D831	85207831
	100 mm	G½B	Bottom back	Stainless steel 304	1,0	0/0.6 bar	RF100Gly D831	85209831
	100 mm	G½B	Bottom back	Stainless steel 304	1,0	0/1 bar	RF100Gly D831	85210831
	100 mm	G½B	Bottom back	Stainless steel 304	1,0	0/1.6 bar	RF100Gly D831	85211831
	100 mm	G½B	Bottom back	Stainless steel 304	1,0	0/2.5 bar	RF100Gly D831	85212831
	100 mm	G½B	Bottom back	Stainless steel 304	1,0	0/4 bar	RF100Gly D831	85213831
	100 mm	G½B	Bottom back	Stainless steel 304	1,0	0/6 bar	RF100Gly D831	85214831
	100 mm	G½B	Bottom back	Stainless steel 304	1,0	0/10 bar	RF100Gly D831	85215831
	100 mm	G½B	Bottom back	Stainless steel 304	1,0	0/16 bar	RF100Gly D831	85216831
	100 mm	G½B	Bottom back	Stainless steel 304	1,0	0/25 bar	RF100Gly D831	85217831
	100 mm	G½B	Bottom back	Stainless steel 304	1,0	0/40 bar	RF100Gly D831	85218831
	100 mm	G½B	Bottom back	Stainless steel 304	1,0	0/60 bar	RF100Gly D831	85219831
	100 mm	G½B	Bottom back	Stainless steel 304	1,0	0/100 bar	RF100Gly D831	85220831
	100 mm	G½B	Bottom back	Stainless steel 304	1,0	0/160 bar	RF100Gly D831	85221831
	100 mm	G½B	Bottom back	Stainless steel 304	1,0	0/250 bar	RF100Gly D831	85222831

Blue part no. = in-stock items

	Housing ⌀	Connection	Alignment	Housing	Accuracy class	Range	Type	Part no.
	100 mm	G½B	Bottom back	Stainless steel 304	1,0	0/400 bar	RF100Gly D831	85223831
	100 mm	G½B	Bottom back	Stainless steel 304	1,0	0/600 bar	RF100Gly D831	85224831
	100 mm	G½B	Bottom back	Stainless steel 304	1,0	0/1,000 bar	RF100Gly D831	85225831

Blue part no. = in-stock items

RF160Gly D831

	Housing ⌀	Connection	Alignment	Housing	Accuracy class	Range	Type	Part no.
	160 mm	G½B	Bottom back	Stainless steel 304	1,0	-1/0 bar	RF160Gly D831	85251831
	160 mm	G½B	Bottom back	Stainless steel 304	1,0	-1/+0.6 bar	RF160Gly D831	85252831
	160 mm	G½B	Bottom back	Stainless steel 304	1,0	-1/+1.5 bar	RF160Gly D831	85253831
	160 mm	G½B	Bottom back	Stainless steel 304	1,0	-1/+3 bar	RF160Gly D831	85254831
	160 mm	G½B	Bottom back	Stainless steel 304	1,0	-1/+5 bar	RF160Gly D831	85255831
	160 mm	G½B	Bottom back	Stainless steel 304	1,0	-1/+9 bar	RF160Gly D831	85256831
	160 mm	G½B	Bottom back	Stainless steel 304	1,0	-1/+15 bar	RF160Gly D831	85257831
	160 mm	G½B	Bottom back	Stainless steel 304	1,0	0/0.6 bar	RF160Gly D831	85259831
	160 mm	G½B	Bottom back	Stainless steel 304	1,0	0/1 bar	RF160Gly D831	85260831
	160 mm	G½B	Bottom back	Stainless steel 304	1,0	0/1.6 bar	RF160Gly D831	85261831
	160 mm	G½B	Bottom back	Stainless steel 304	1,0	0/2.5 bar	RF160Gly D831	85262831
	160 mm	G½B	Bottom back	Stainless steel 304	1,0	0/4 bar	RF160Gly D831	85263831
	160 mm	G½B	Bottom back	Stainless steel 304	1,0	0/6 bar	RF160Gly D831	85264831
	160 mm	G½B	Bottom back	Stainless steel 304	1,0	0/10 bar	RF160Gly D831	85265831
	160 mm	G½B	Bottom back	Stainless steel 304	1,0	0/16 bar	RF160Gly D831	85266831
	160 mm	G½B	Bottom back	Stainless steel 304	1,0	0/25 bar	RF160Gly D831	85267831
	160 mm	G½B	Bottom back	Stainless steel 304	1,0	0/40 bar	RF160Gly D831	85268831
	160 mm	G½B	Bottom back	Stainless steel 304	1,0	0/60 bar	RF160Gly D831	85269831
	160 mm	G½B	Bottom back	Stainless steel 304	1,0	0/100 bar	RF160Gly D831	85270831
	160 mm	G½B	Bottom back	Stainless steel 304	1,0	0/160 bar	RF160Gly D831	85271831
	160 mm	G½B	Bottom back	Stainless steel 304	1,0	0/250 bar	RF160Gly D831	85272831

Blue part no. = in-stock items

Housing ⌀	Connection	Alignment	Housing	Accuracy class	Range	Type	Part no.
160 mm	G½B	Bottom back	Stainless steel 304	1,0	0/400 bar	RF160Gly D831	85273831
160 mm	G½B	Bottom back	Stainless steel 304	1,0	0/600 bar	RF160Gly D831	85274831
160 mm	G½B	Bottom back	Stainless steel 304	1,0	0/1,000 bar	RF160Gly D831	85275831

Blue part no. = in-stock items