Resistance thermometers WTh 28

Benefits

- Suitable for use in pharmaceutical and biotechnology applications and in the food industry
- Resistance thermometer with Pt100 sensor
- Clamp connection
- Wetted parts 316 Ti

Application

Resistance thermometer for hygienic processes, e.g. food, beverages, pharmaceutical, biotechnology applications

Technical specifications

Sensor
1 x Pt100
3-wire
Class B, IEC 751

Measuring insert
Replaceable
Diameter: 6 mm

Thermowell
∅ 9 x 1 mm
Stainless steel 316 Ti

Neck
∅ 9 x 1 mm
Length: 140 mm
Stainless steel 316 Ti

Process connection
Clamp 1"

Installation length
100, 125, 160, 250, 400 mm

Connection head
Type B, type BUZ
Aluminium die cast

Electrical connection
Cable gland

Degree of protection
IP 54 (EN 60529)

Measuring range
-35/+300 °C

Options

- Sensor class A
- Reduced measuring tip (6 mm)
- Transmitter installation
- Other thermowell materials
- Other process connections
- Other installation lengths
- Field housing

Detail views

Type WTh 28

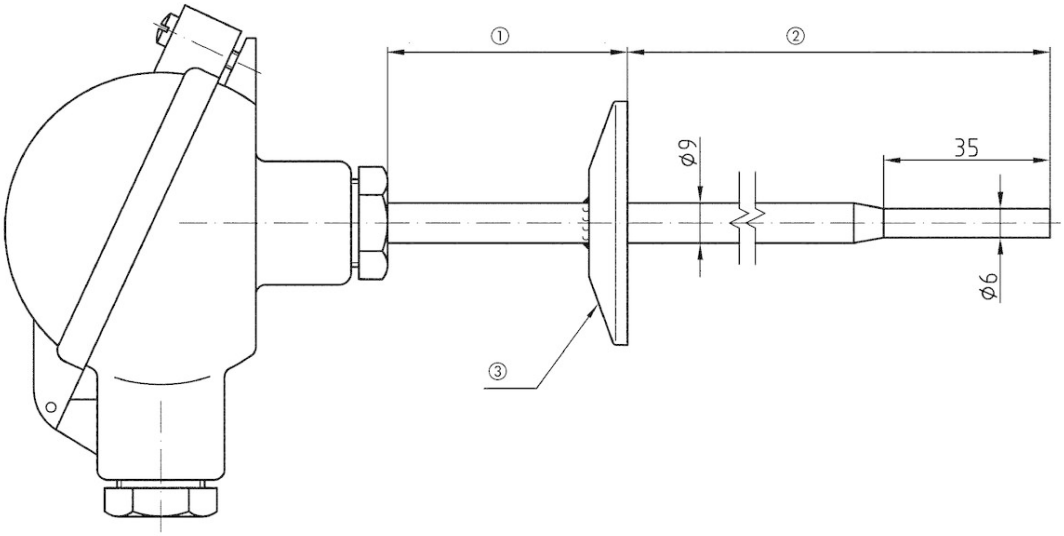

Dimensions (in mm)

1. Neck length
2. Installation length
3. Clamp connection

Technical drawings

Type WTh 28

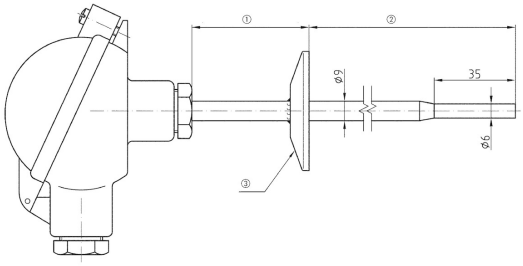

Dimensions (in mm)

1. Neck length
2. Installation length
3. Clamp connection

Versions

		Installation length	Part no.
	Resistance thermometers WTh 28	100 mm	32230
	Resistance thermometers WTh 28	125 mm	32231
	Resistance thermometers WTh 28	160 mm	32232
	Resistance thermometers WTh 28	250 mm	32233
	Resistance thermometers WTh 28	400 mm	32234

Blue part no. = in-stock items